NOTE: UNLESS OTHERWISE SPECIFIED

1. ALL RESISTANCE VALUES ARE IN OHMS, ±5%, 1/4 WATT
2. ALL CAPACITANCE VALUES ARE IN MICROFARADS
3. ALL INDUCTANCE VALUES ARE IN MICROHENRYS
4. ALL DIODES ARE IN4148

REV	ZONE	ECO #	REVISION	APPD
B		P333	REVISED AND REDRAWN	

F1 REVERSE ENGINEERED 2026-06
FROM S/N: 14043 AKA "511347" JDM
Exchanged CR7 & CR17
U8, U9 was LF353
Q3 - Q6 was 2N5640
R1 - R4 was 1K
R13 was 1.2K
R17 was 3.65K
R45, R49 was 24K

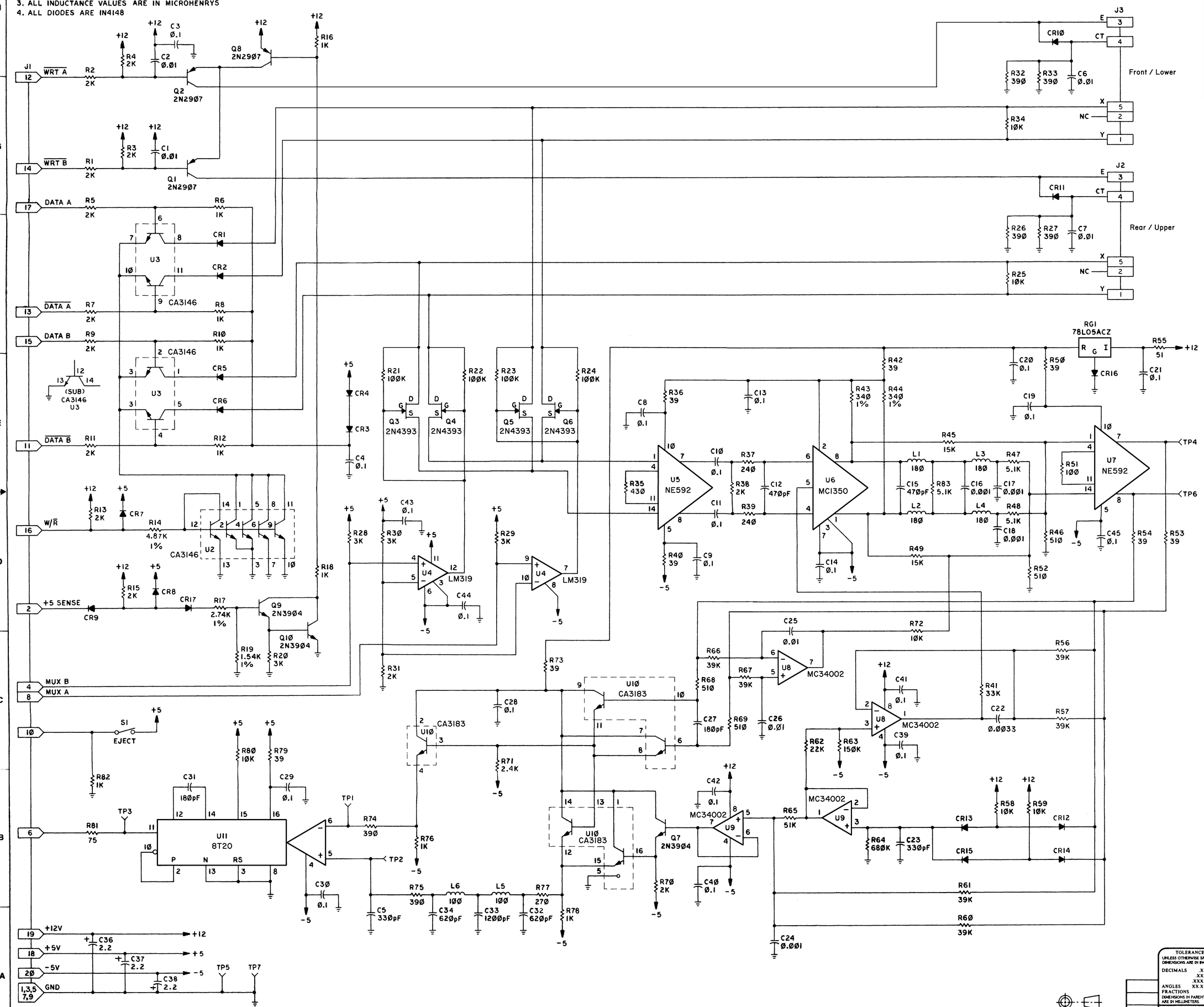

THIRD ANGLE PROJECTION
DO NOT SCALE DRAWING

ITEM	QTY	PART NUMBER	DESCRIPTION

TOLERANCES UNLESS OTHERWISE SPECIFIED
DIMENSIONS ARE IN INCHES
DECIMALS .X ± .XX ± .XXX ±
ANGLES XX.X ±
FRACTIONS ±
DIMENSIONS IN PARENTHESIS ARE IN MILLIMETERS

DRAWN BY Bill's 10/15/82
CHECKED BY 12/12
APPROVED BY DATE
RELEASED BY DATE 12/16

MATERIAL: N/A
NEXT ASSY. FINISH: N/A

apple computer inc.

TITLE SCHEMATIC, TWIGGY ANALOG BD, (NEW)

SIZE E DRAWING NUMBER 050-5001-F1
SCALE: — SHEET 1 OF 1

DRAWING NUMBER 050-5001-F1 SHT 1 OF 1